Longse

5MP Smart Hybrid Light IP Camera

BMMDKL5RC

Ai Function | WDR | IP67 | SD Card Slot | Built-in Mic

- Built-in Mic
- WDR
- With Internal POE
- External SD card slot (Max 512GB)
- Smart Hybrid light: IR mode, Warm Light Mode and Smart Mode
- Illegal Parking(based on vehicle shape)
- Heat Map

www.longse.com
marketing@longse.com
No.18, Dongming 3rd Road, Huangpu District, Guangzhou, Guangdong, China

Longse Technology Limited | Longse_Group | Longse Technology | Longse Technology | Longse_Group

© 2006-2026 Longse Technology Limited All Rights Reserved. Data Subject To Change Without Notice.

Camera	
Image Sensor	1/2.8" SONY Starvis Back-illuminated CMOS sensor
Resolution	5MP
Effective Pixels	2616(H)*1964(V)
Compression	H.264/H.264+/H.265/H.265+
Audio Compression	G711A/U,AAC,MP2L2
TV System	PAL/NTSC
Electronic Shutter Time	Auto: 1/3-1/100000Sec
Minimun Illumination	Color: 0.003 Lux@(F1.6, AGC ON), 0 Lux with white light, B/W: 0 Lux with IR
S/N Ratio	60dB
Scanning System	Progressive
Video Output	Network
Reset Button	Optional
Lens	
Focal Length & FOV	2.8 mm, horizontal FOV 96°, vertical FOV 72°, diagonal FOV 124° 4 mm, horizontal FOV 80°, vertical FOV 56°, diagonal FOV 107° 6 mm, horizontal FOV 54°, vertical FOV 29°, diagonal FOV 62°
Lens Type	Fixed focal lens, 2.8, 4 and 6 mm optional
Focus Control	Fixed
Aperture	F1.6
Pixels	5MP
Night Vision	
Supplement Light	IR: 3PCS, Warm light: 3PCS
Supplement Light Distance	IR: 40m, Warm light: 30m
Supplement Light Status	Auto Control
Supplement Light Power On	Smart, Manual & Timed mode
Network	
Ethernet	RJ-45 (10/100Base-T)
Wireless	N/A
Protocol	TCP/IP, IPv4/v6, ICMP, HTTP, HTTPS, FTP, DHCP, DNS, DDNS, RTP, RTSP, RTMP, RTCP, PPPoE, NTP, SMTP, UDP, SNMP, Qos, 802.1x
ONVIF	Support ONVIF 24.12(Profile S/T/G/M)
P2P	YES
POE	Internal, Support IEEE 802.3af
Video Delay	300ms (Within the Lan)
Main Stream 1	2592*1944@30fps
Main Stream 2	2560*1440@30fps
Main Stream 3	1920*1080@30fps 1280*720@30fps
Sub Stream 1	1280*720@30fps
Sub Stream 2	720*480@30fps

© 2006-2026 Longse Technology Limited All Rights Reserved. Data Subject To Change Without Notice.

Sub Stream 3	N/A
Tri Stream	N/A
IE Brower	Microsoft Edge, IE11, Google Chrome, Firefox, Mac Safari
Smart Phone	iPhone, Android
AI Function	
Intelligent Analysis	Intrusion Detection/Line Crossing Detection/Enter Area Detection/Leave Area Detection/Line Crossing Count(based on human, vehicle and non-motor vehicle detection), Loitering Detection/People Gathering Detection(based on human detection), Motion Detection(supports the detection based on human, vehicle and non-motor vehicle movement), Illegal Parking(based on vehicle shape), Heat Map
Camera Features	
Day/Night	Color/ B&W (IR-CUT)
Image Config	Saturation/Brightness/Contrast /Sharpness, Mirror, 3D NR , White Balance, Anti Flicker, Video Tampering, HLC, Scene Change Detection
Full Color	Support
Corridor Pattern	Support
Defog Mode	N/A
ROI	Support
BLC	Support
WDR	120dB
Motion Detection	Support(support enable the detection based on human and Vehicle movement)
Privacy Masking	3 Rectangular Zone
Recording Mode	NVR/CMS/Web
Language	Chinese Simplified, Chinese Traditional, English, Korean, Polish, French, Japanese, Spanish, Portuguese, Italian, Hebrew, Ukrainian, Arabic, Vietnamese, Thai, Hungarian, Czech
Interface	
Audio	Default: Built in Mic Option: Audio I/O Option: Built in Mic+Built in Speaker
Alarm	N/A
SD Card Slot	Default: External SD card slot (Max 512GB)
RS485	N/A
General	
Housing	Main Body: Metal, Rain Cover:Plastic, IP67
Anti-cut Bracket	NO
IR Cut Filter	YES
Operation Temperature	-30℃ ~ +60℃ RH95% Max
Storage Temperature	-30℃ ~ +60℃ RH95% Max
Power Source	DC12V±10%,950mA
Dimension	89.0 x 81.1 x 245.1mm
Weight (N.W./G.W.)	Approx. 1009.5 g / Approx. 1202.8 g

© 2006-2026 Longse Technology Limited All Rights Reserved. Data Subject To Change Without Notice.

Dimensions (mm)

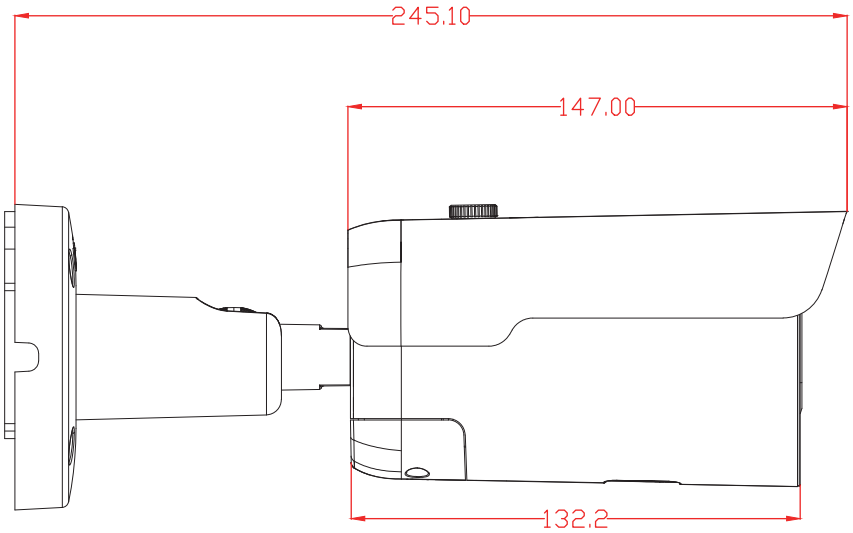

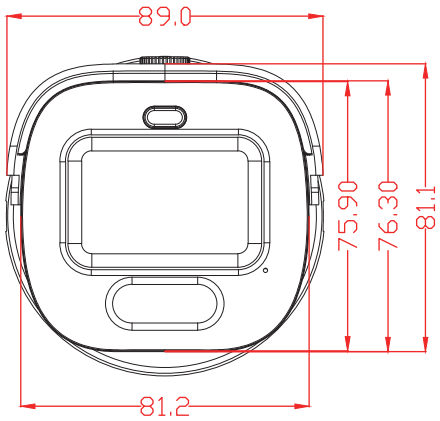

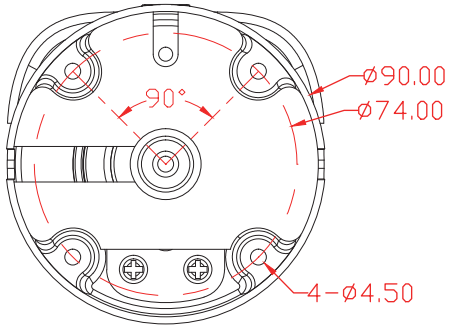

Optional Accessories

B320
Junction BOX

B116
Junction BOX

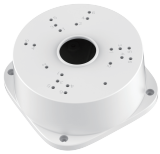

PC115
Junction BOX

PB14146
Junction BOX

© 2006-2026 Longse Technology Limited All Rights Reserved. Data Subject To Change Without Notice.