Longse

4MP LPR IP Camera

BMMDNL4LPR

- 3.2 TOPS AI compute
- F1.4 AF lens
- IR + Warm Light
- SD Card Slot
- Built-in Mic & Speaker
- Red - Blue Alarm Light

- 1/1.8" CMOS sensor Sony, 120dB HDR
- 4MP@60fps
- Smart Hybrid Light (IR + Warm lights)
- Red & blue flashing light and sound alarm
- License plate detection (detection and screenshot capture)
- Illegal parking (based on vehicle shape and license plate)
- License plate recognition (based on license plate)
- The IPC supports opening entrance and exit gates through alarm linkage.
- Illegal parking records and license plate recognition records

www.longse.com
marketing@longse.com
No.18, Dongming 3rd Road, Huangpu District, Guangzhou, Guangdong, China

Longse Technology Limited
Longse_Group
Longse Technology
Longse Technology
Longse_Group

© 2006-2026 Longse Technology Limited All Rights Reserved. Data Subject To Change Without Notice.

Camera	
Image Sensor	1/1.8" SONY Starvis2 Back-illuminated CMOS sensor
Resolution	4MP
Effective Pixels	2704(H)*1540(V)
Compression	H.264/H.264+/H.265/H.265+/MJPEG
Audio Compression	G711A/U,AAC
TV System	PAL/NTSC
Electronic Shutter Time	Auto: 1/3-1/100000Sec
Minimun Illumination	Color: 0.01 Lux@(F1.0, AGC ON), 0 Lux with white light, B/W: 0 Lux with IR
S/N Ratio	60dB
Scanning System	Progressive
Video Output	Network
Reset Button	Optional
Lens	
Focal Length & FOV	4.38~9.33mm, horizontal FOV 114°~48.3°, vertical FOV 59°~27.1°, diagonal FOV 141.6°~55.5°
Lens Type	Varifocal Lens
Focus Control	Auto Focus
Aperture	F1.4~F2.15
Pixels	AF-5MP
Night Vision	
Supplement Light	IR 3PCS, Warm light 3PCS
Supplement Light Distance	IR 30m, Warm light 25m
Supplement Light Status	Auto Control
Supplement Light Power On	Smart, Manual & Timed mode
Network	
Ethernet	RJ-45 (10/100Base-T)
Wireless	N/A
Protocol	TCP/IP, IPv4/v6, ICMP, HTTP, HTTPS, FTP, DHCP, DNS, DDNS, RTP, RTSP, RTMP, RTCP, PPPoE, NTP, SMTP, UDP, SNMP, Qos, 802.1x
ONVIF	Support ONVIF 24.12(Profile S/T/G/M)
P2P	YES
POE	Internal, Support IEEE 802.3af
Video Delay	300ms (Within the Lan)
Main Stream 1	2560*1440@60fps
Main Stream 2	1920*1080@60fps
Main Stream 3	1280*720@60fps
Sub Stream 1	1280*720@60fps
Sub Stream 2	720*480@60fps
Sub Stream 3	N/A
Tri Stream	1280*720@30fps 720*480@30fps

© 2006-2026 Longse Technology Limited All Rights Reserved. Data Subject To Change Without Notice.

IE Brower	Microsoft Edge, IE11, Google Chrome, Firefox, Mac Safari
Smart Phone	iPhone, Android
AI Function	
Intelligent Analysis	Motion Detection(supports the detection based on human and vehicle movement), Illegal Parking(based on vehicle shape and license plates), License Plate Detection, License Plate Recognition
Camera Features	
Day/Night	Color/ B&W (IR-CUT)
Image Config	Saturation/Brightness/Contrast/Sharpness, Mirror, 3D NR, White Balance, Anti Flicker, Video Tampering, HLC, Distortion, Scene Change Detection
Full Color	Support
Corridor Pattern	Support
Defog Mode	Support
ROI	Support
BLC	Support
WDR	120dB
Motion Detection	Support(support enable the detection based on human and Vehicle movement)
Privacy Masking	3 Rectangular Zone
Recording Mode	NVR/CMS/Web
Language	Chinese Simplified, Chinese Traditional, English, Korean, Polish, French, Japanese, Spanish, Portuguese, Italian, Hebrew, Ukrainian, Arabic, Vietnamese, Thai, Hungarian, Czech
Interface	
Audio	Default: Built in Mic+Built in Speaker
Alarm	Default: Alarm I/O
SD Card Slot	Default: External SD card slot (Max 512GB)
RS485	N/A
General	
Housing	Main Body: Metal Rain Cover:Plastic, IP67
Anti-cut Bracket	NO
IR Cut Filter	YES
Operation Temperature	-30℃ ~ +60℃ RH95% Max
Storage Temperature	-30℃ ~ +60℃ RH95% Max
Power Source	DC12V±10%, 740mA
Dimension	89.0 x 81.1 x 245.1 mm
Weight (N.W./G.W.)	Approx. 1100 g / Approx. 1250 g

© 2006-2026 Longse Technology Limited All Rights Reserved. Data Subject To Change Without Notice.

Dimensions (mm)

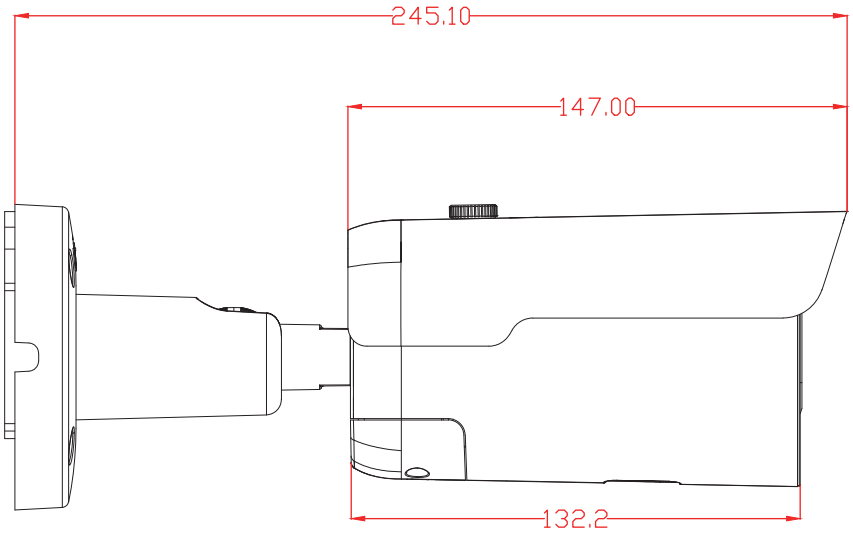

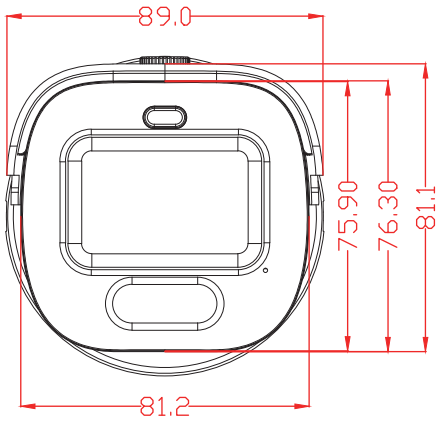

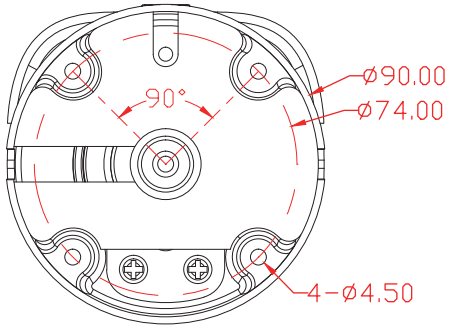

Optional Accessories

B270

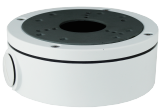

B320
Junction BOX

B116
Junction BOX

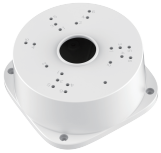

PC115
Junction BOX

PB14146
Junction BOX

© 2006-2026 Longse Technology Limited All Rights Reserved. Data Subject To Change Without Notice.