Longse

8MP AI ISP IP Camera

CMLENP8AC

Ai Function | Full Color | IP67 | SD Card Slot | Built-in Mic | Alarm I/O

- Built-in Mic
- External SD Card Slot, Alarm I/O
- Face Detection & Face Recognition
- Line Crossing Count
- Illegal Parking(based on vehicle shape and license plates)
- License Plate Detection
- Abandoned Object Detection & Removed Object Detection
- Heat Map

www.longse.com
marketing@longse.com
No.18, Dongming 3rd Road, Huangpu District, Guangzhou, Guangdong, China

Longse Technology Limited | Longse_Group | Longse Technology | Longse Technology | Longse_Group

© 2006-2026 Longse Technology Limited All Rights Reserved. Data Subject To Change Without Notice.

Camera	
Image Sensor	1/1.8" SONY Starvis2 Back-illuminated CMOS sensor
Resolution	8MP
Effective Pixels	3856(H)*2180(V)
Compression	H.264/H.264+/H.265/H.265+/MJPEG
Audio Compression	G711A/U,AAC,MP2L2
TV System	PAL/NTSC
Electronic Shutter Time	Auto: 1/3-1/100000Sec
Minimun Illumination	Color: 0.0001 Lux@(F1.0, AGC ON), 0 Lux with white light, B/W: 0 Lux with IR
S/N Ratio	60dB
Scanning System	Progressive
Video Output	Network
Reset Button	Optional
Lens	
Focal Length & FOV	4 mm, horizontal FOV 109°, vertical FOV 59°, diagonal FOV 131° 6 mm, horizontal FOV 92°, vertical FOV 49°, diagonal FOV 111°
Lens Type	Fixed focal lens, 4 and 6 mm optional
Focus Control	Fixed
Aperture	F1.0
Pixels	8MP
Night Vision	
Supplement Light	IR: 2PCS, Warm light: 2PCS
Supplement Light Distance	IR: 40m, Warm light: 30m
Supplement Light Status	Auto Control
Supplement Light Power On	Smart, Manual & Timed mode
Network	
Ethernet	RJ-45 (10/100Base-T)
Wireless	N/A
Protocol	TCP/IP, IPv4/v6, ICMP, HTTP, HTTPS, FTP, DHCP, DNS, DDNS, RTP, RTSP, RTMP, RTCP, PPPoE, NTP, SMTP, UDP, SNMP, Qos, 802.1x
ONVIF	Support ONVIF 24.12(Profile S/T/G/M)
P2P	YES
POE	Internal, Support IEEE 802.3af
Video Delay	300ms (Within the Lan)
Main Stream 1	3840*2160@60fps,3200*1600@60fps
Main Stream 2	2560*1440@60fps,1920*1080@60fps
Main Stream 3	1280*720@60fps
Sub Stream 1	1280*720@30fps
Sub Stream 2	720*480@30fps

© 2006-2026 Longse Technology Limited All Rights Reserved. Data Subject To Change Without Notice.

Sub Stream 3	N/A
Tri Stream	1280*720@30fps,720*480@30fps
IE Brower	Microsoft Edge, IE11, Google Chrome, Firefox, Mac Safari
Smart Phone	iPhone, Android
AI Function	
Intelligent Analysis	Intrusion Detection/Line Crossing Detection/Enter Area Detection/Leave Area Detection/Line Crossing Count(based on human, vehicle and non-motor vehicle detection), Loitering Detection/People Gathering Detection(based on human detection), Motion Detection(supports the detection based on human, vehicle and non-motor vehicle movement), Face Detection, Illegal Parking(based on vehicle shape and license plates), License Plate Detection, Abandoned Object Detection, Removed Object Detection, Heat Map, Face Recognition, Fire Detection, Video Structured Analytics
Camera Features	
Day/Night	Color/ B&W (IR-CUT)
Image Config	Saturation/Brightness/Contrast/Sharpness, Mirror, 3D NR, White Balance, Anti Flicker, Video Tampering, HLC, Distortion, Scene Change Detection
Full Color	Support
Corridor Pattern	Support
Defog Mode	Support
ROI	Support
BLC	Support
WDR	120dB
Motion Detection	Support(support enable the detection based on human and Vehicle movement)
Privacy Masking	3 Rectangular Zone
Recording Mode	NVR/CMS/Web
Language	Chinese Simplified, Chinese Traditional, English, Korean, Polish, French, Japanese, Spanish, Portuguese, Italian, Hebrew, Ukrainian, Arabic, Vietnamese, Thai, Hungarian, Czech
Interface	
Audio	Default: Built in Mic Option: Audio I/O Support Sound Detection
Alarm	Default: Alarm I/O
SD Card Slot	Default: External SD card slot (Max 512GB)
RS485	N/A
General	
Housing	Metal, IP67
Anti-cut Bracket	NO
IR Cut Filter	YES
Operation Temperature	-30℃ ~ +60℃ RH95% Max
Storage Temperature	-30℃ ~ +60℃ RH95% Max
Power Source	DC12V±10%, 600mA
Dimension	φ115 x113(H) mm
Weight (N.W./G.W.)	Approx. 680 g / Approx. 820 g

© 2006-2026 Longse Technology Limited All Rights Reserved. Data Subject To Change Without Notice.

Dimensions (mm)

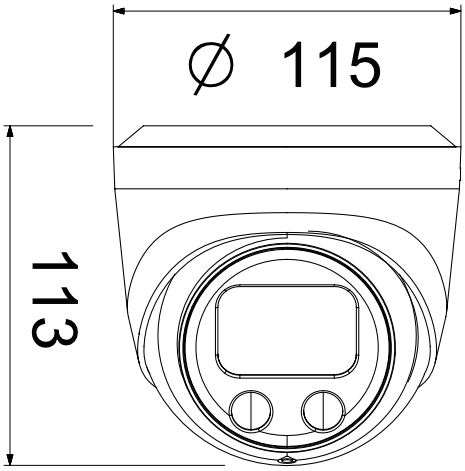

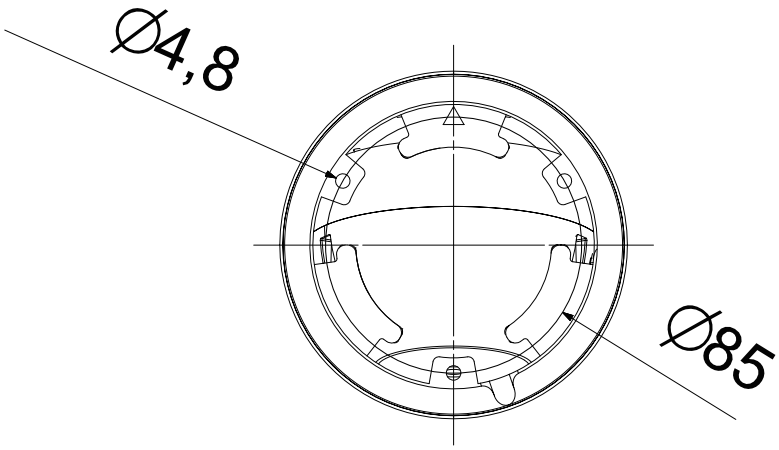

Optional Accessories

B320
Junction BOX

B116
Junction BOX

PB14146
Junction BOX

© 2006-2026 Longse Technology Limited All Rights Reserved. Data Subject To Change Without Notice.