Longse

# 2MP Smart Hybrid Light IP Camera

**CMSBKL2RC**

Ai Function | WDR | IP67 | Built-in Mic

- WDR
- With Internal POE
- Built in Mic
- Smart Hybrid light: IR mode, Warm Light Mode and Smart Mode
- Support Intrusion Detection (Based on human shape&vehicle detection)

www.longse.com
marketing@longse.com
No.18, Dongming 3rd Road, Huangpu District, Guangzhou, Guangdong, China

Longse Technology Limited | Longse_Group | Longse Technology | Longse Technology | Longse_Group

© 2006-2026 Longse Technology Limited All Rights Reserved. Data Subject To Change Without Notice.

| Camera | |
|---|---|
| Image Sensor | 1/2.8" SONY Starvis Back-illuminated CMOS Sensor |
| Resolution | 2MP |
| Effective Pixels | 1945(H)*1097(V) |
| Compression | H.264/H.265/H.264+/H.265+ |
| Audio Compression | G711A/U,AAC,MP2L2 |
| TV System | PAL/NTSC |
| Electronic Shutter Time | Auto: 1/3-1/100000Sec |
| Minimun Illumination | Color: 0.001 Lux@(F1.6, AGC ON),0 Lux with white light, B/W: 0 Lux with IR |
| S/N Ratio | 60dB |
| Scanning System | Progressive |
| Video Output | Network |
| Reset Button | Optional |
| **Lens** | |
| Focal Length & FOV | 2.8 mm, horizontal FOV 106°, vertical FOV 56°, diagonal FOV 127°<br>4 mm, horizontal FOV 80°, vertical FOV 56°, diagonal FOV 107°<br>6 mm, horizontal FOV 54°, vertical FOV 29°, diagonal FOV 62° |
| Lens Type | Fixed focal lens, 2.8, 4 and 6 mm optional |
| Focus Control | Fixed |
| Aperture | F1.6 |
| Pixels | 2MP |
| **Night Vision** | |
| Supplement Light | IR: 2PCS, Warm light: 2PCS |
| Supplement Light Distance | IR: 30m, Warm light: 20m |
| Supplement Light Status | Auto Control |
| Supplement Light Power On | Smart, Manual & Timed mode |
| **Network** | |
| Ethernet | RJ-45 (10/100Base-T) |
| Wireless | N/A |
| Protocol | TCP/IP, IPv4/v6, ICMP, HTTP, HTTPS, FTP, DHCP, DNS, DDNS, RTP, RTSP, RTMP, RTCP, PPPoE, NTP, SMTP, UDP, Qos, 802.1x |
| ONVIF | Support ONVIF 24.12(Profile S/T/G/M) |
| P2P | YES |
| POE | Internal, Support IEEE 802.3af |
| Video Delay | 300ms (Within the Lan) |
| Main Stream 1 | 1920*1080@30fps |
| Main Stream 2 | 1280*720@30fps |
| Main Stream 3 | 720*480@30fps |
| Sub Stream 1 | 720*480@30fps |

© 2006-2026 Longse Technology Limited All Rights Reserved. Data Subject To Change Without Notice.

| | |
|---|---|
| Sub Stream 2 | N/A |
| Sub Stream 3 | N/A |
| Tri Stream | N/A |
| IE Brower | Microsoft Edge, IE11, Google Chrome, Firefox, Mac Safari |
| Smart Phone | iPhone, Android |
| **AI Function** | |
| Intelligent Analysis | Intrusion Detetion(based on human and Vehicle Detection), Motion Detection(supports the detection based on human movement) |
| **Camera Features** | |
| Day/Night | Color/ B&W (IR-CUT ) |
| Image Config | Saturation/Brightness/Contrast/Sharpness, Mirror, 3D NR, White Balance, Anti Flicker, Video Tampering, HLC |
| Full Color | Support |
| Corridor Pattern | N/A |
| Defog Mode | N/A |
| ROI | Support |
| BLC | Support |
| WDR | 120dB |
| Motion Detection | Support(support enable the detection based on human and Vehicle movement) |
| Privacy Masking | 3 Rectangular Zone |
| Recording Mode | NVR/CMS/Web |
| Language | Chinese Simplified, Chinese Traditional, English, Korean, Polish, French, Japanese, Spanish, Portuguese, Italian, Hebrew, Ukrainian, Arabic, Vietnamese, Thai, Hungarian, Czech |
| **Interface** | |
| Audio | Defalut: Build in Mic<br>Option: Audio In<br>Option: Audio I/O |
| Alarm | N/A |
| SD Card Slot | Default: Without<br>Option: External SD card slot (Max 512GB) |
| RS485 | N/A |
| **General** | |
| Housing | Metal , IP67 |
| Anti-cut Bracket | NO |
| IR Cut Filter | YES |
| Operation Temperature | -20℃ ~ +60℃ RH95% Max |
| Storage Temperature | -20℃ ~ +60℃ RH95% Max |
| Power Source | DC12V±10%, 700mA |
| Dimension | ¢96 x 91(H) mm |
| Weight (N.W./G.W.) | Approx. 500 g / Approx. 600 g |

© 2006-2026 Longse Technology Limited All Rights Reserved. Data Subject To Change Without Notice.

# Dimensions (mm)

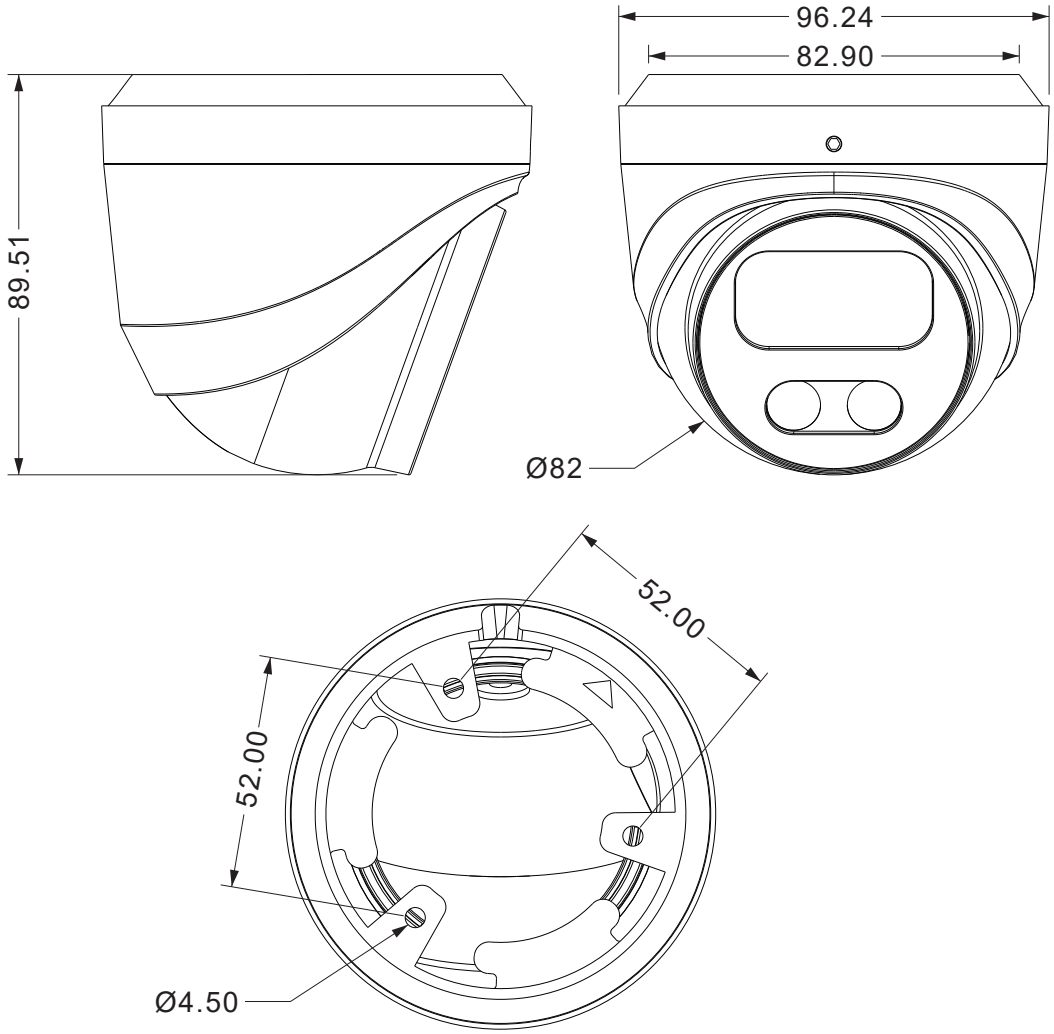


# Optional Accessories

B310
Junction Box

PB14146
Plastic Junction Box

MC106
Deep Base

B173-01
Side Bracket

© 2006-2026 Longse Technology Limited All Rights Reserved. Data Subject To Change Without Notice.