Longse

2MP Smart Hybrid Light IP Camera

CMSCFCV2RC

Ai Function | DWDR | IP67 | Full Color | Built-in Mic

- DWDR
- With Internal POE
- Built in Mic
- Smart Hybrid light: IR mode, Warm Light Mode and Smart Mode.
- Support Intrusion Detection (Based on human shape&vehicle detection)

www.longse.com
marketing@longse.com
No.18, Dongming 3rd Road, Huangpu District, Guangzhou, Guangdong, China

Longse Technology Limited | Longse_Group | Longse Technology | Longse Technology | Longse_Group

© 2006-2026 Longse Technology Limited All Rights Reserved. Data Subject To Change Without Notice.

Camera	
Image Sensor	1/3" Progressive Scan CMOS Sensor
Resolution	2MP
Effective Pixels	1928(H)*1088(V)
Compression	H.264/H.265/H.264+/H.265+/MJPEG
Audio Compression	G711A/U,AAC
TV System	PAL/NTSC
Electronic Shutter Time	Auto: 1/3-1/100000Sec
Minimun Illumination	Color: 0.05 Lux@(F1.6, AGC ON), 0 Lux with white light, B/W: 0 Lux with IR
S/N Ratio	60dB
Scanning System	Progressive
Video Output	Network
Reset Button	Optional
Lens	
Focal Length & FOV	2.8 mm, horizontal FOV 94°, vertical FOV 50°, diagonal FOV 109° 4 mm, horizontal FOV 76°, vertical FOV 41°, diagonal FOV 90°
Lens Type	Fixed focal lens, 2.8 mm and 4 mm optional
Focus Control	Fixed
Aperture	F1.6
Pixels	3MP
Night Vision	
Supplement Light	IR: 2PCS, Warm light: 2PCS
Supplement Light Distance	IR: 40m, Warm light: 30m
Supplement Light Status	Auto Control
Supplement Light Power On	Smart, Manual & Timed mode
Network	
Ethernet	RJ-45 (10/100Base-T)
Wireless	N/A
Protocol	TCP/IP, IPv4/v6, ICMP, HTTP, HTTPS, FTP, DHCP, DNS, DDNS, RTP, RTSP, RTMP, RTCP, PPPoE, NTP, SMTP, UDP, SNMP, Qos, 802.1x
ONVIF	Support ONVIF 24.12(Profile S/T/G/M)
P2P	YES
POE	Internal, Support IEEE 802.3af
Video Delay	300ms (Within the Lan)
Main Stream 1	1920*1080@30fps
Main Stream 2	1280*720@30fps
Main Stream 3	N/A
Sub Stream 1	720*480@30fps
Sub Stream 2	352*288@30fps

© 2006-2026 Longse Technology Limited All Rights Reserved. Data Subject To Change Without Notice.

Sub Stream 3	N/A
Tri Stream	N/A
IE Brower	Microsoft Edge, IE11, Google Chrome, Firefox, Mac Safari
Smart Phone	iPhone, Android
AI Function	
Intelligent Analysis	Intrusion Detetion(based on human and Vehicle Detection), Motion Detection(supports the detection based on human movement)
Camera Features	
Day/Night	Color/ B&W (IR-CUT)
Image Config	Saturation/Brightness/Contrast/Sharpness, Mirror, 3D NR, White Balance, Anti Flicker, Video Tampering, HLC, Distortion
Full Color	Support
Corridor Pattern	Support
Defog Mode	N/A
ROI	Support
BLC	Support
WDR	DWDR
Motion Detection	Support(support enable the detection based on human and Vehicle movement)
Privacy Masking	3 Rectangular Zone
Recording Mode	NVR/CMS/Web
Language	Chinese Simplified, Chinese Traditional, English, Korean, Polish, French, Japanese, Spanish, Portuguese, Italian, Hebrew, Ukrainian, Arabic, Vietnamese, Thai, Hungarian, Czech
Interface	
Audio	Default: Build-in Mic Option: Audio In Option: Audio I/O
Alarm	N/A
SD Card Slot	Default: Without Option: External SD card slot (Max 512GB)
RS485	N/A
General	
Housing	Metal , IP67
Anti-cut Bracket	NO
IR Cut Filter	YES
Operation Temperature	-30℃ ~ +60℃ RH95% Max
Storage Temperature	-30℃ ~ +60℃ RH95% Max
Power Source	DC12V±10%, 700mA
Dimension	Φ126.8 x 93.8 mm
Weight (N.W./G.W.)	Approx. 610 g / Approx. 750 g

© 2006-2026 Longse Technology Limited All Rights Reserved. Data Subject To Change Without Notice.

Dimensions (mm)

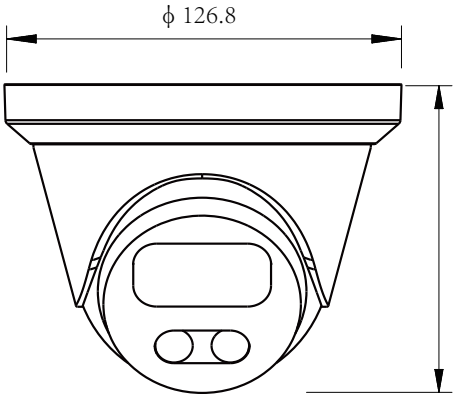

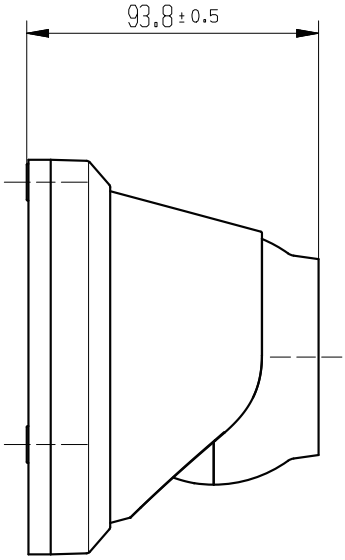

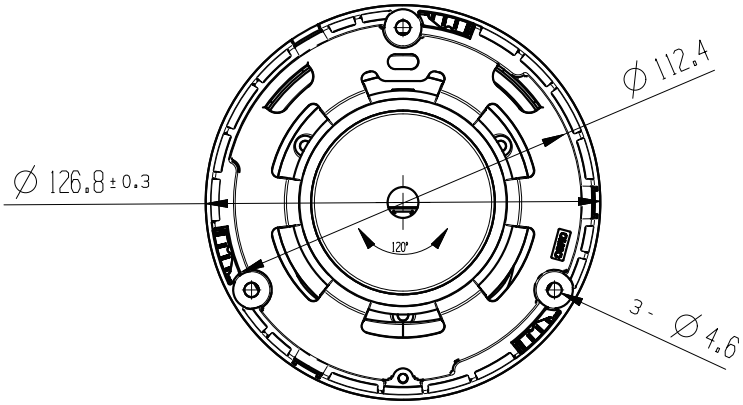

Optional Accessories

B245
Side Bracket

© 2006-2026 Longse Technology Limited All Rights Reserved. Data Subject To Change Without Notice.