Longse

4MP Miniature Wi-Fi IP Camera

LMCM36FW400W

Ai Function | wifi 6 | IP67

- WDR
- Bulid in Mic
- WIFI 6
- With SD Card Slot (Max. 512G)
- Main Stream: 4MP@30fps /1080P@30fps/ 720P@30fps

www.longse.com
marketing@longse.com
No.18, Dongming 3rd Road, Huangpu District, Guangzhou, Guangdong, China
Longse Technology Limited | Longse_Group | Longse Technology | Longse Technology | Longse_Group

© 2006-2026 Longse Technology Limited All Rights Reserved. Data Subject To Change Without Notice.

Camera	
Image Sensor	1/3" Progressive Scan CMOS Sensor
Resolution	4MP
Effective Pixels	2576(H)*1456(V)
Video Compression	H.264/H.264+/H.265/H.265+/MJPEG
Audio Compression	G.711A/U, AAC
TV System	PAL/NTSC
Electronic Shutter Time	Auto: 1/3-1/100000Sec
Minimun Illumination	Color: 0.01 Lux @ (F1.6, AGC ON),B/W: 0 Lux with IR
S/N Ratio	60dB
Scanning System	Progressive
Video Output	Network
Reset Button	Optional
Lens	
Focal Length & FOV	2.8 mm, horizontal FOV 95°, vertical FOV 54°, diagonal FOV 109°
Lens Type	Fixed focal lens, 2.8 mm
Focus Control	Fixed
Aperture	F2.2
Pixels	5Mp
Night Vision	
Supplement Light	N/A
Supplement Light Distance	N/A
Supplement Light Status	Auto Control
Supplement Light Power On	Smart, Manual & Timed mode
Network	
Ethernet	RJ-45 (10/100Base-T)
Protocol	TCP/IP,IPv4/v6, ICMP, HTTP, HTTPS, FTP, DHCP, DNS, DDNS, RTP, RTSP, RTMP, RTCP, PPPoE, NTP, SMTP, UDP, Qos, 802.1x
ONVIF	Support ONVIF 24.12(Profile S/T/G/M)
P2P	YES, Support QR Code
POE	N/A
Video Delay	300ms (Within the Lan)
Main Stream 1	2688*1512@25fps
Main Stream 2	2560*1440@30fps
Main Stream 3	1920*1080@30fps 1280*720@30fps
Sub Stream 1	1280*720@30fps
Sub Stream 2	720*480@30fps
Sub Stream 3	N/A
Tri Stream	N/A

© 2006-2026 Longse Technology Limited All Rights Reserved. Data Subject To Change Without Notice.

IE Brower	Microsoft Edge, IE11, Google Chrome, Firefox, Mac Safari
Smart Phone	iPhone, Android
Wireless	
Antena	3dbi
Hotspot	N/A
Wi-Fi	Wi-Fi(IEEE802.11b/g/n/ax),2.4Ghz
WIFI Range	No obstacles 400m Max.
AI Function	
Intelligent Analysis	Intrusion Detetion(based on human and Vehicle Detection), Motion Detection(support enable the detection based on human and Vehicle movement)
Camera Features	
Day/Night	Color/ B&W (IR-CUT)
Image Config	Saturation/Brightness/Contrast/Sharpness, Mirror, 3D NR, White Balance, Anti Flicker, Video Tampering, HLC, Distortion
Corridor Pattern	Support
Defog Mode	Support
ROI	Support
BLC	Support
WDR	DWDR
Motion Detection	Support
Privacy Masking	3 Rectangular Zone
Recording Mode	NVR/CMS/Web
Language	Chinese Simplified, Chinese Traditional, English, Korean, Polish, French, Japanese, Spanish, Portuguese, Italian, Hebrew, Ukrainian, Arabic, Vietnamese, Thai, Hungarian, Czech
Interface	
Audio	Default: Built in Mic Option: Audio In Option: Audio I/O
Alarm	N/A
SD Card Slot	Default: External SD card slot (Max 512GB)
RS485	N/A
General	
Housing	Metal
Anti-cut Bracket	No
IR Cut Filter	No
Operation Temperature	-20℃ ~ +60℃ RH95% Max
Storage Temperature	-20℃ ~ +60℃ RH95% Max
Power Source	DC12V±10%, 350mA
Dimension	36 x 36 x 27 mm
Weight (G.W.)	Approx. 300 g

© 2006-2026 Longse Technology Limited All Rights Reserved. Data Subject To Change Without Notice.

Dimensions (mm)

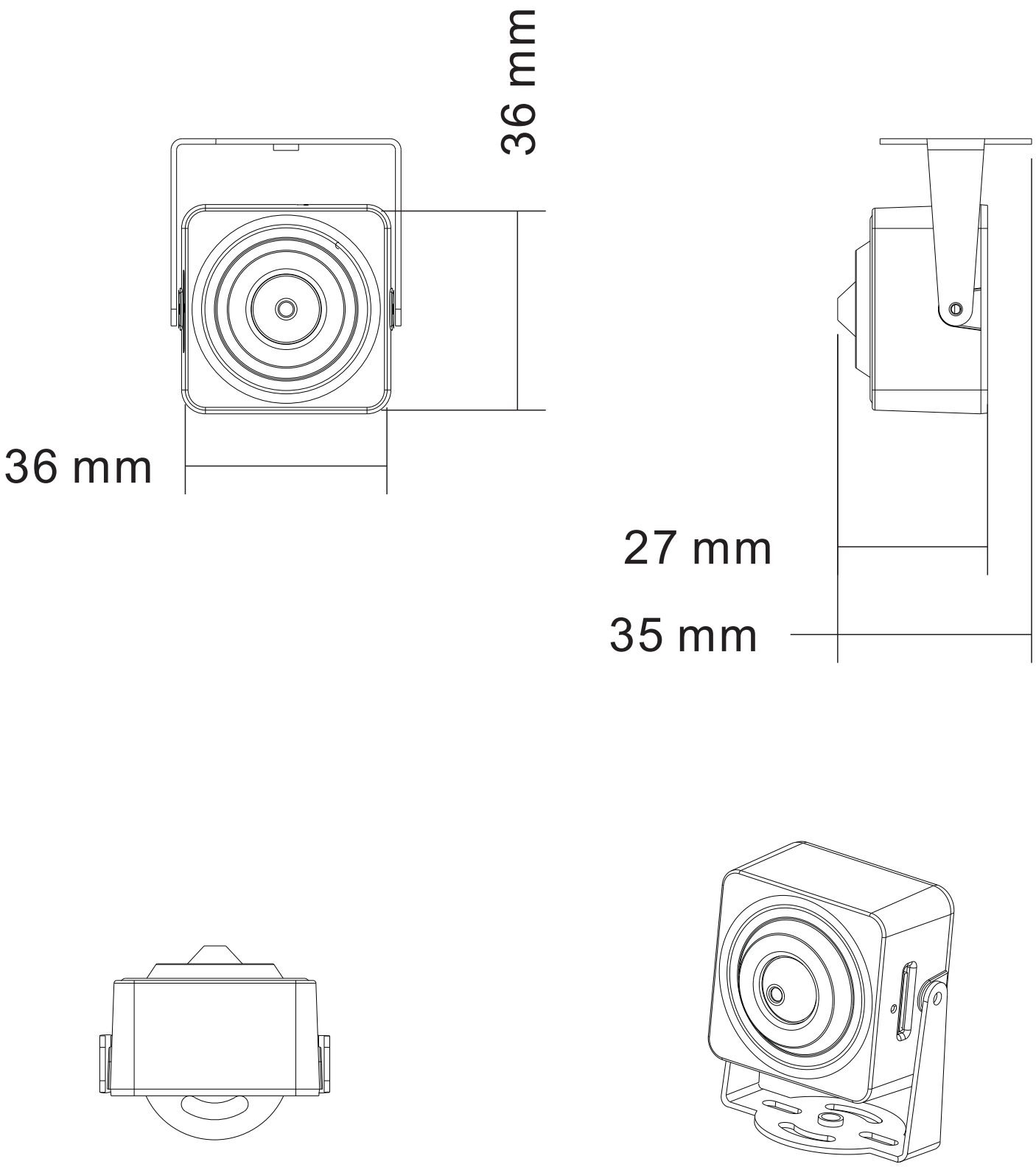

© 2006-2026 Longse Technology Limited All Rights Reserved. Data Subject To Change Without Notice.