Longse

4MP Fisheye IP Camera

LMDERL400

SD Card Slot | Built-in Mic | Alarm I/O

- With SD Card Slot, With 4G Storage
- With Internal POE
- With Wifi (Max.100m)
- 2-Way Audio
- Alarm I/O

www.longse.com
marketing@longse.com
No.18, Dongming 3rd Road, Huangpu District, Guangzhou, Guangdong, China

Longse Technology Limited | Longse_Group | Longse Technology | Longse Technology | Longse_Group

© 2006-2026 Longse Technology Limited All Rights Reserved. Data Subject To Change Without Notice.

Camera	
Image Sensor	1/2.8" SONY Starvis Back-illuminated CMOS sensor
Resolution	4MP
Effective Pixels	2616 (H)*1964 (V)
Compression	H.264/H.264+/H.265/H.265+
Audio Compression	G711A/U,AAC,MP2L2
TV System	PAL/NTSC
Electronic Shutter Time	Auto: 1/3-1/100000Sec
Minimun Illumination	Color: 0.003 lux@F1.6,AGC ON; B/W :0 lux with IR
S/N Ratio	60dB
Scanning System	Progressive
Video Output	Network
Reset Button	Support
LENS Type	
Focus Length	1.1 mm, horizontal FOV 180°, vertical FOV 180°, diagonal FOV 180°
Lens Type	Board Lens 1.1mm
Focus Control	Fixed
Aperture	Fixed
Pixels	4MP
Night Vision	
Supplement Light	42μx 3PCS
Supplement Light Distance	15M
Supplement Light Status	Auto Control
Supplement Light Power On	Smart, Manual & Timed mode
Network	
Ethernet	RJ-45 (10/100Base-T)
Protocol	TCP/IP, IPv4/v6, ICMP, HTTP, HTTPS, FTP, DHCP, DNS, DDNS, RTP, RTSP, RTMP, RTCP, PPPoE, NTP, SMTP, UDP, SNMP, Qos, 802.1x
ONVIF	Support ONVIF 24.12(Profile S/T/G/M)
P2P	YES, Support QR Code
POE	Internal POE, Support IEEE 802.3af
Video Delay	300ms (Within the Lan)
Main Stream 1	1920*1920@30fps
Main Stream 2	1536*1536@30fps
Main Stream 3	1024*1024@30fps
Sub Stream 1	1024*1024@30fps
Sub Stream 2	720*720@30fps
Sub Stream 3	512*512@30fps
Tri Stream	1024*1024@30fps 720*720@30fps 512*512@30fps

© 2006-2026 Longse Technology Limited All Rights Reserved. Data Subject To Change Without Notice.

IE Brower	Microsoft Edge, IE11, Google Chrome, Firefox, Mac Safari
Smart Phone	iPhone, Android
Wireless	
Antena	3dbi
Hotspot	Support
Wi-Fi	
WIFI Range	No obstacles 100m Max.
AI Function	
Intelligent Analysis	N/A
Camera Features	
Day/Night	Color/ B&W (IR-CUT)
Image Config	Saturation/Brightness/Contrast/Sharpness, Mirror, 3D NR, White Balance,Anti Flicker, Video Tampering, HLC
Corridor Pattern	N/A
ROI	Support
Defog Mode	Support
BLC	Support
WDR	120dB
Motion Detection	Support
Privacy Masking	
Recording Mode	NVR/VMS/Web/SD Card
Language	Chinese Simplified, Chinese Traditional, English, Korean, Polish, French, Japanese, Spanish, Portuguese, Italian, Hebrew, Ukrainian, Arabic, Vietnamese, Thai, Hungarian, Czech
Interface	
Audio	Default: Two Way Audio
Alarm	Default: Alarm I/O
SD Card Slot	External, Support Max 512GB, Built in 4G Storage
RS485	N/A
General	
Housing	Body:Metal, Bracket: Plastic
Anti-cut Bracket	NO
IR Cut Filter	YES
Operation Temperature	-20℃ ~ +60℃ RH95% Max
Storage Temperature	-20℃ ~ +60℃ RH95% Max
Power Source	DC12V±10%, 550mA
Dimension	¢120 x 49(H) mm
Weight	500g

© 2006-2026 Longse Technology Limited All Rights Reserved. Data Subject To Change Without Notice.

Dimensions (mm)

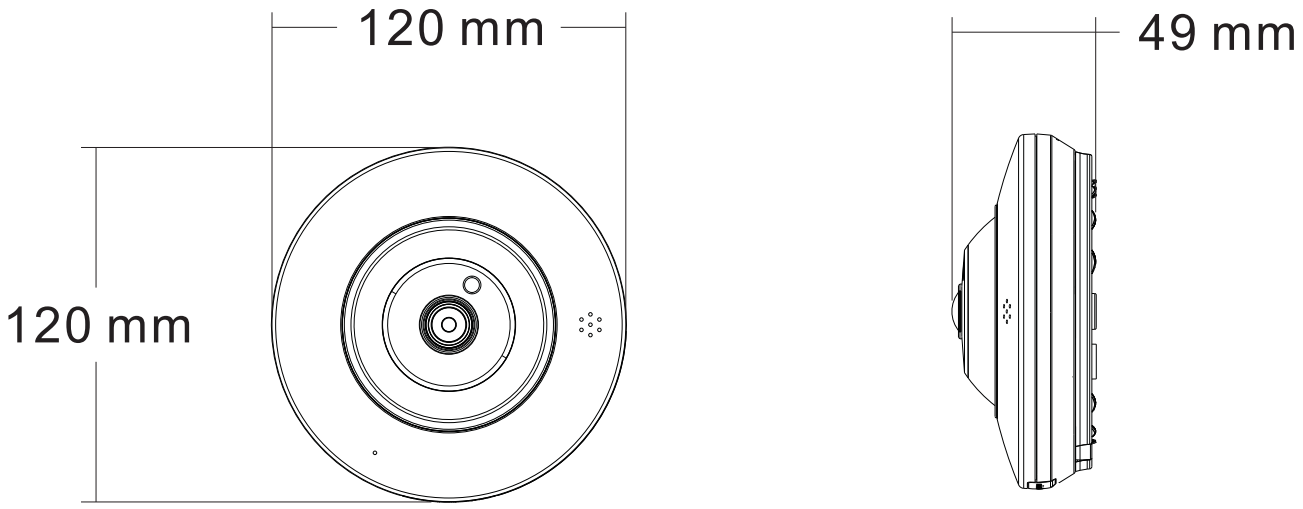

Optional Accessories

© 2006-2026 Longse Technology Limited All Rights Reserved. Data Subject To Change Without Notice.