Longse

2MP IP PTZ Camera

PT7K118XIGC200

2MP | Smart Analytics | Cruise Scan | Optical Zoom

- 18X Optical Zoom (5.98mm-93.9mm; F2.57-F3.85)
- Power Consumption less than 12W
- 3D Human Tracking / Intrusion Detection
- IR: 150m
- With Internal SD Card Slot
- Build in Mic + Speaker, Two way Audio

www.longse.com
marketing@longse.com
No.18, Dongming 3rd Road, Huangpu District, Guangzhou, Guangdong, China

Longse Technology Limited | Longse_Group | Longse Technology | Longse Technology | Longse_Group

© 2006-2026 Longse Technology Limited All Rights Reserved. Data Subject To Change Without Notice.

Camera	
Image Sensor	1/2.9" Progressive Scan CMOS Sensor
Horizontal Resolution	2MP
Compression	H.264/H.265/MJPEG
Minimun Illumination	Color: 0.008 Lux @ (F1.8, AGC ON),B/W: 0 Lux with IR
S/N Ratio	60db
PTZ	
Horizontal Rotation Speed	80°/S
Horizontal Rotation Range	0°~360°
Tilt Rotation Speed	40°/S
Tilt Rotation Range	0°~93°
Preset Points	220
Guard Tours	8 groups
Guard Points	Max.20 points
Lens	
Focus Length	5.35-96.3mm F1.8-F3.9
Focus Control	18X Optical Zoom
Night Vision	
Infrared LED	¢35x6PCS + 2PCS Laser LED
IR Range	150m
Day-night mode	AUTO
Network	
Network protocol	TCP/IP,ICMP,HTTP,HTTPS,FTP,DHCP,DNS,DDNS,RTP,RTSP,RTCP,NTP,SMTP
ONVIF	Support (PROFILE S,PROFILE T）
Network interface	Built-in RJ45 network interface,support 10M/100M IP DATA
Main Stream1	1920*1080@30fps
Main Stream2	1280*720@30fps
Main Stream3	N/A
Main Stream4	N/A
Main Stream5	N/A
Main Stream6	N/A
Sub Stream1	D1(720*480)@20fps
Sub Stream2	CIF(352*288)@20fps
Sub Stream3	N/A
Sub Stream4	N/A
AI Function	
Intelligent Analysis	3D Human Tracking(Effective Range:5~50M ,Speed: 3~12KM/h) / Motion detection based on human detection/ Intrusion Detection based on human detection

© 2006-2026 Longse Technology Limited All Rights Reserved. Data Subject To Change Without Notice.

Camera Features	
Day/Night	Color/ B&W (IR-CUT)
Image Config	Saturation/Brightness/Contrast/Sharpness, Mirror, 3D NR, White Balance, Anti Flicker
Full Color	N/A
Corridor Pattern	N/A
Defog Mode	Support
ROI	N/A
BLC	Support
WDR	DWDR
Motion Detection	Support(support enable the detection based on human movement only)
Privacy Masking	3 Rectangular Zone
Recording Mode	NVR/CMS/Web
Language	Chinese Simplified, Chinese Traditional, English, Korean, Polish, French, Japanese, Spanish, Portuguese, Italian, Hebrew, Ukrainian, Arabic, Vietnamese, Czech
Interface	
Audio	Built-in Mic & Speaker
Audio Encode	G711A，C711U
Alarm	N/A
SD Card Slot	Support
POE	Optional
General	
Weatherproof	IP66
Operating Temperature	Light on: -20~45℃ Light off:-20~55℃
Operating Humidity	≤90% Non Condensing
Power	DC12/1.5A(Device power consumption) DC12/3A(Power supply)
Lightning Protection	Transient voltage 6000V
Dimension	device:204*204*360(mm) package:310*310*440(mm)
Weight	device:2.28Kgs package:4.05Kgs

© 2006-2026 Longse Technology Limited All Rights Reserved. Data Subject To Change Without Notice.

Dimensions (mm)

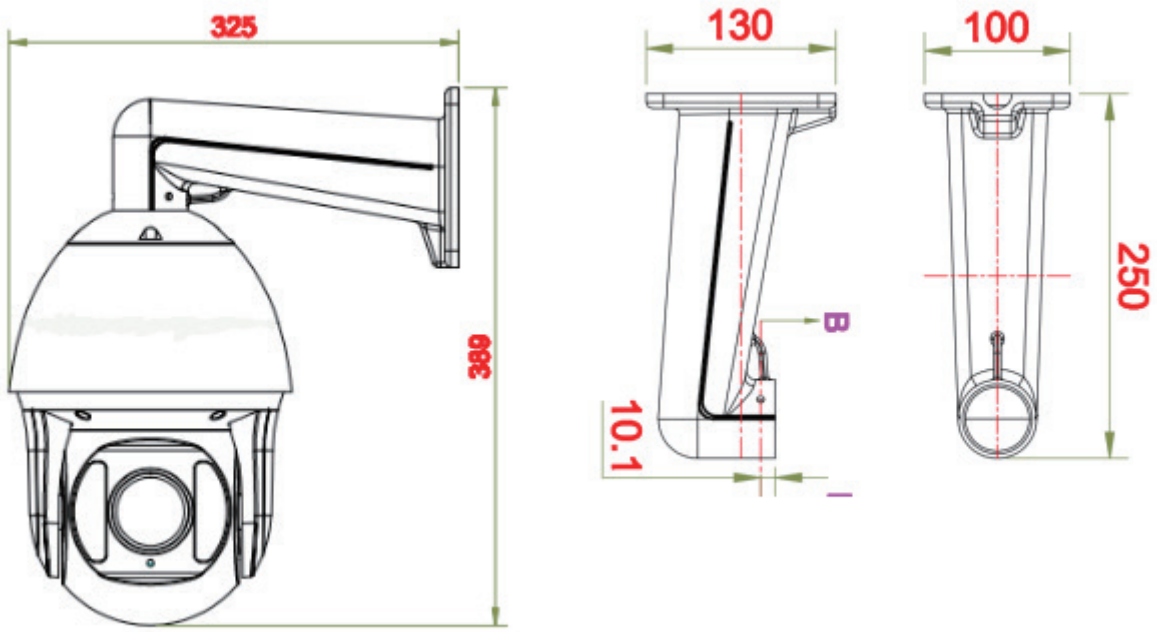

© 2006-2026 Longse Technology Limited All Rights Reserved. Data Subject To Change Without Notice.