3MP
Smart Wi-Fi PT Camera

RE-3D

Introduction

RE-3D is an indoor dual-light Pan&Tilt camera developed by our company, Wi-Fi network connection, support human detection, full-color night vision. It can be applied to home, living room, store, store and other monitoring places.

Dimension

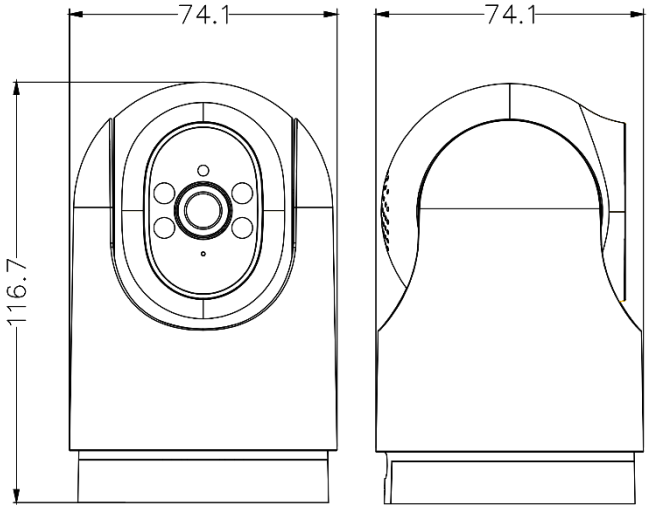

Main Features

- WiFi network
- Dual Light Alert
- Human Detection
- Two-way Talk
- Full Color Night Vision
- Alarm Push
- Voice Alarm
- Human tracking
- 360° panorama
- TF Card Storage
- Cloud Storage

Product Parameters

Model RE-3D

Camera

Image Sensor	1/4" Low illumination Sensor
Min. Illumination	Color:0.01Lux @(F1.2,AGC ON); 0 Lux with IR
	B/W:0.001 Lux @ (F1.2,AGC ON),0 Lux with IR
Shutter Speed	1/50(1/60)s to1/10,000s
Lens	4.0mm@ F2.0；M12
Mic	Built-in microphone
Speaker	Built-in speaker
Day & Night	full-color night vision, infrared night vision
Video storage	TF card storage, cloud storage
Voice talk	Two-way voice talk

Compression

Video Compression	H.265AI
Output Bit Rate	0.1Mbps~8Mbps
Audio Compression	G.711a

Wi-Fi

Wi-Fi Standard	IEEE802.11b, 802.11g, 802.11n
Frequency Range	2.4 GHz ~ 2.4835 GHz

Image

Max. Resolution	2304*1296
Frame Rate	12FPS

Interface

Storage Interface	1*TF Card interface (max. 128G)
Power Interface	1*DC5V power interface
Button	1*Reset Button

General

Operating Temperature	-10℃~60℃
Operating Humidity	Humidity less than 90% (non-condensing)
Power Supply	DC5V
Night Vision Distance	10 m
Pickup Distance	⩾5 m
Bare Weight	About 236g
Dimensions	About 117mm*74mm*74mm
Installation	Wall-mounted, top-mounted

Featured Functions

AI human detection, AI intelligent area vigilance, personalized voice alarm bell, intelligent tracking and shooting, dual-light vigilance, full-color night vision, infrared night vision, two-way voice intercom, 360° panoramic monitoring, TF card storage, cloud storage, mobile phone remote monitoring.