XAG-53TA80PS-YRA Module Specification

Version:20230817

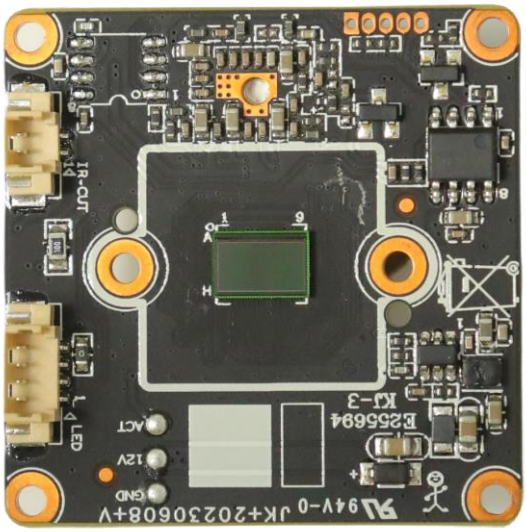

Introduction

XAG-53TA80PS-YRA is a 8 million low-light bi-directional coaxial audio camera module, 8MP resolution, the image is more clear and detailed, support for bi-directional coaxial audio, zero-latency data transmission, full real-time, high-fidelity, long transmission distance, coaxial transmission of up to 500 meters, the standard coaxial control, the back-end call OSD, support for coaxial upgrades, respectively, access to the AHD/TVI/CVI back-end products, N system P system two-in-one, back-end deployment, easy switching, support for infrared/white light dual-light switching, intelligent alerts, mainly used in ultra-high definition video surveillance cameras.

Main Features

Double light alert

coaxial audio

Coaxial control

Multiple signal outputs

Zero Delay

Electronic Shutter

ICR

Coaxial Upgrade

Lightning Protection

Content

1.Product Parameters 3

2. Interface Description 4

3. Electrical Parameters 4

3.1 Absolute Electrical Parameters 4

3.2 Working Conditions 4

1. Product Parameters

Specifications	XAG-53TA80PS-YRA
ISP	TP3829
Sensor	1/2.5 inch K17 sensor
Signal format	AHD/TVI/CVI
Video Resolution	PAL/NTSC:3840*2160
Minimum Illumination	Color:0.01Lux@(F1.2,AGC ON),0Lux with IR
	Black&White:0.001Lux@(F1.2,AGC ON),0Lux with IR
Photosensitive Resistance	1 photosensitive resistance interface, support the photosensitive resistor input signal and image, IR-CUT, infrared lamp linkage
Shutter	1/50(1/60) seconds to 1/10,000 seconds
Day and Night Function	Support IR-CUT
Lens Parameters	C/CS interface, M12 lens optional
Video output	AHD/TVI/CVI@8MP
Power	DC12V±10%
Coaxial Audio	Support 1ch IN/1ch OUT
Temperature and Humidity	- 10 ℃ ~ 60 ℃, humidity is less than 90% (no condensation)
Consumption	<5W
Size	Standard 38*38 positioning hole
Remarks	Support UTC, coaxial upgrade

2. Interface Description

Dimension:38mm*38mm+38mm*38mm

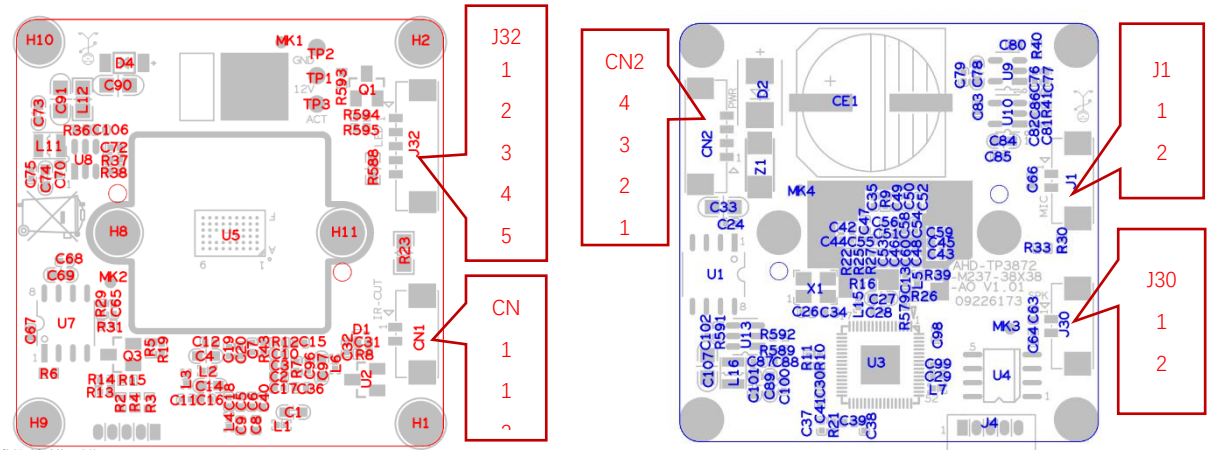

Socket	Specific No	Interface Description	Function
CN1	1	IR-CUTA	IR-CUT
	2	IR-CUTB	
CN2	1	DAC_OUT	Video out
	2	GND	GND
	3	12V	12V in
	4	GND	GND
J1	1	MIC_G	Microphone
	2	MIC_IN	
J30	1	SPKN	speaker
	2	SPKP	

3. Electrical Parameters

3.1 Absolute Electrical Parameters

Parameter	Description	Min	Max	Unit
Ts	Storage temperature	-40	150	℃
VCC	Power supply voltage	9.6	14.4	V
Static electricity discharge voltage (Air)	TAMB-25℃	-4	4	KV
Static electricity discharge voltage (Contact)	TAMB-25℃	-4	4	KV

3.2 Working Conditions

Parameter	Description	Min	Max	Unit
Ta	Working temperature	-20	65	℃
VCC	Power supply voltage	10.8	13.2	V